FIX041A

Sprung stool hinge lid, available in:

FIX041A
Strength: 380N
Finish: Zinc
Packed in: Pairs
Suitable use for - storage units, ottomans, footstools

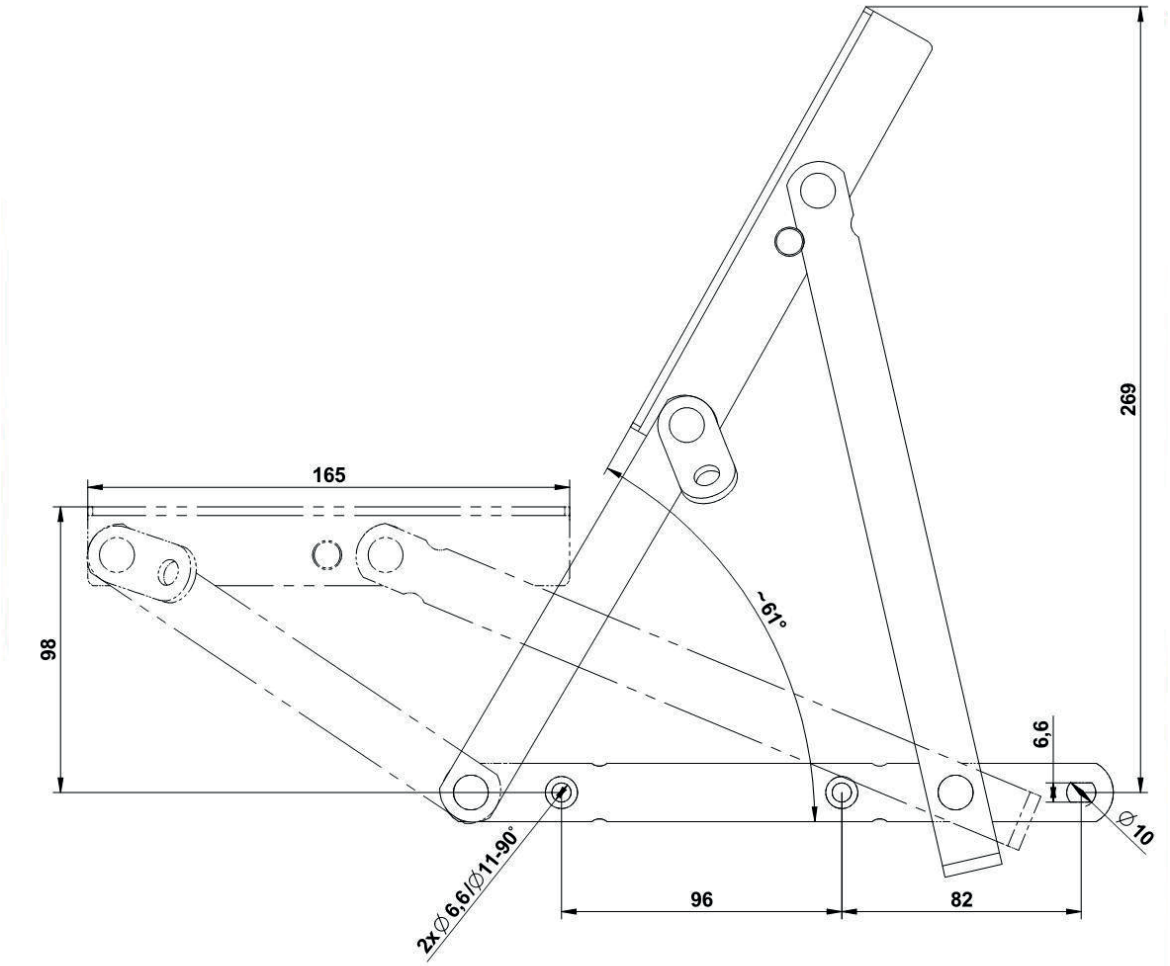

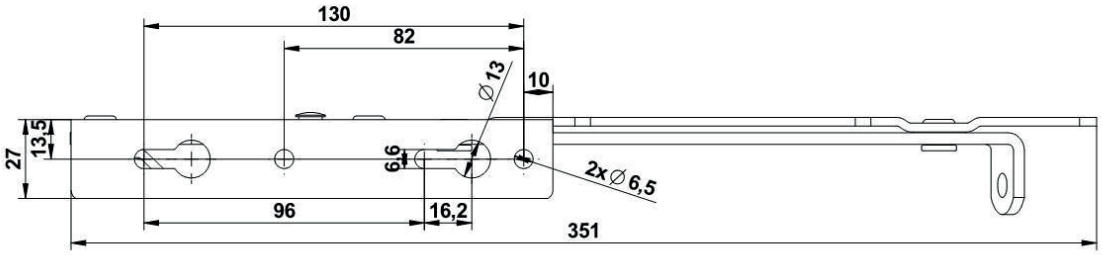

CLOCKWORK COMPONENTS LTD.
T : 01993 775 767 F : 01993 892 313 E: sales@ clockworkcomponentscom
www.clockworkcomponents.com

July 2022

All images, photos, text and designs are protected by copyright and may be subject to additional Design Right Protection