HINGE006

Sprung stool hinge lid, available in:

HINGE006
Packed in: Pairs - 50 pairs/box
Suitable use for small - medium scale - storage units, ottomans & footstools

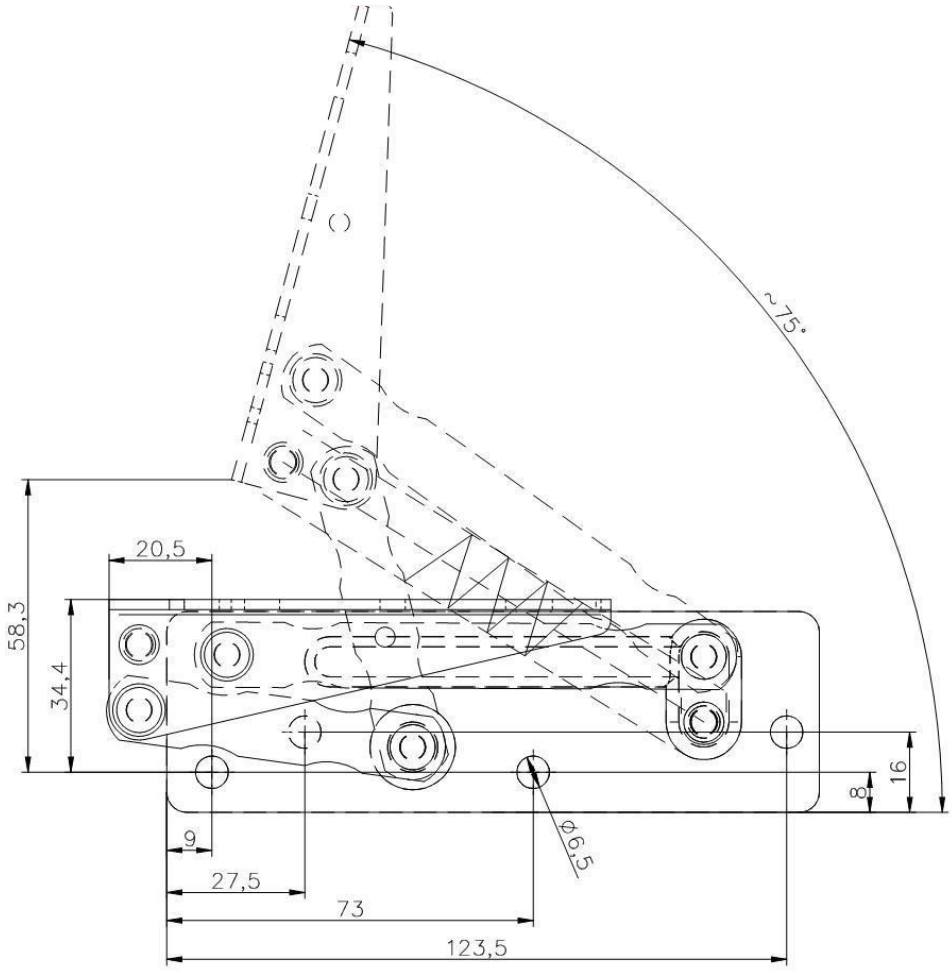

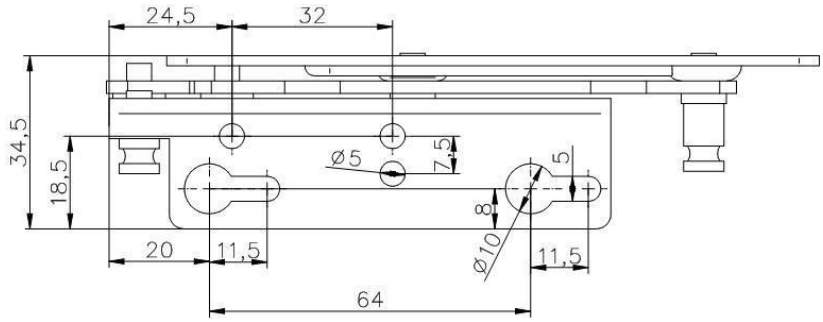

CLOCKWORK COMPONENTS LTD.
T : 01993 775 767 F : 01993 892 313 E: sales@ clockworkcomponentscom
www.clockworkcomponents.com

July 2022

All images, photos, text and designs are protected by copyright and may be subject to additional Design Right Protection